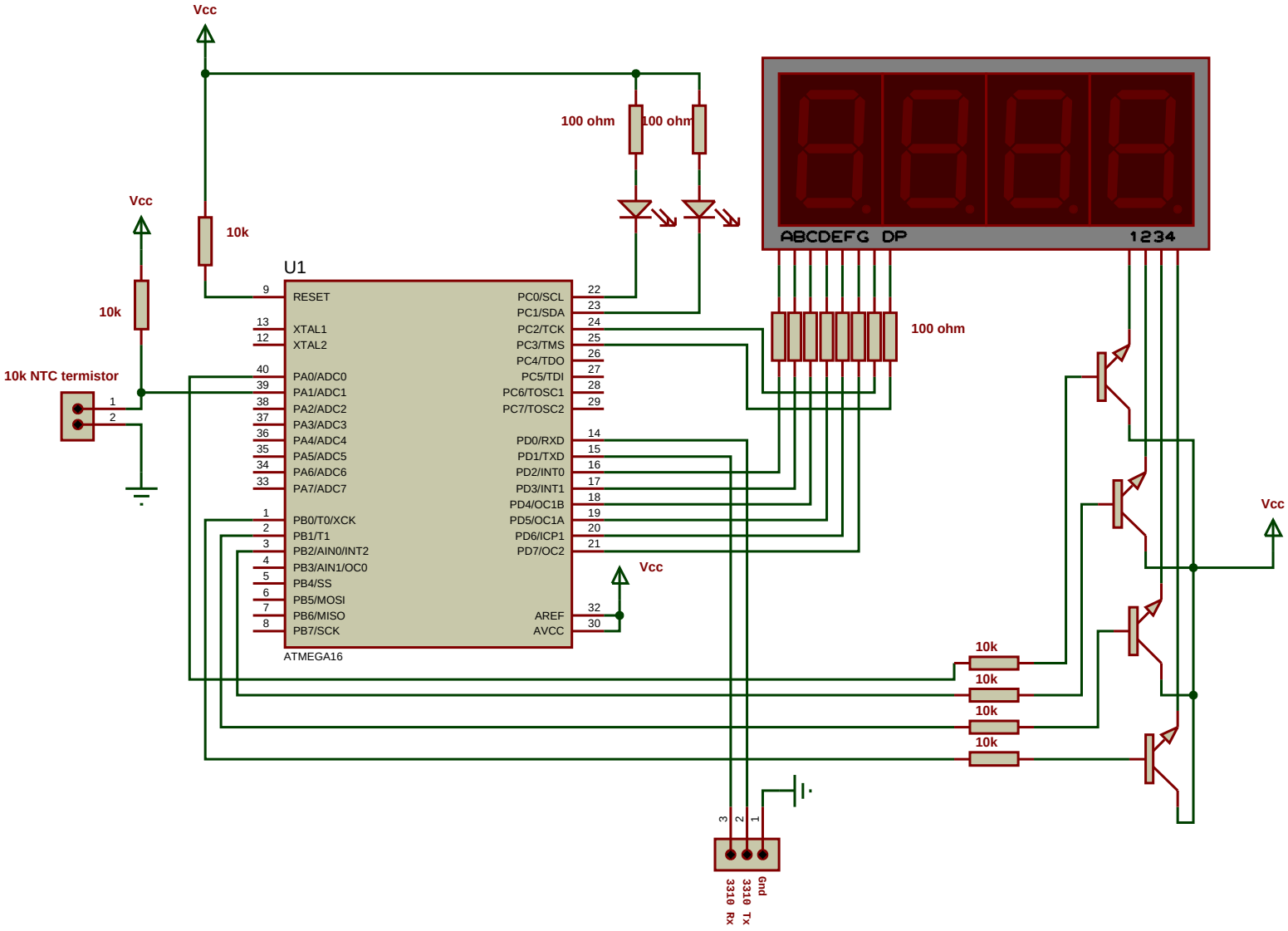


**AVR and Nokia 3310(F-Bus) GSM based remote temperature sensor**

**Abdullbasit H. Alhaita**