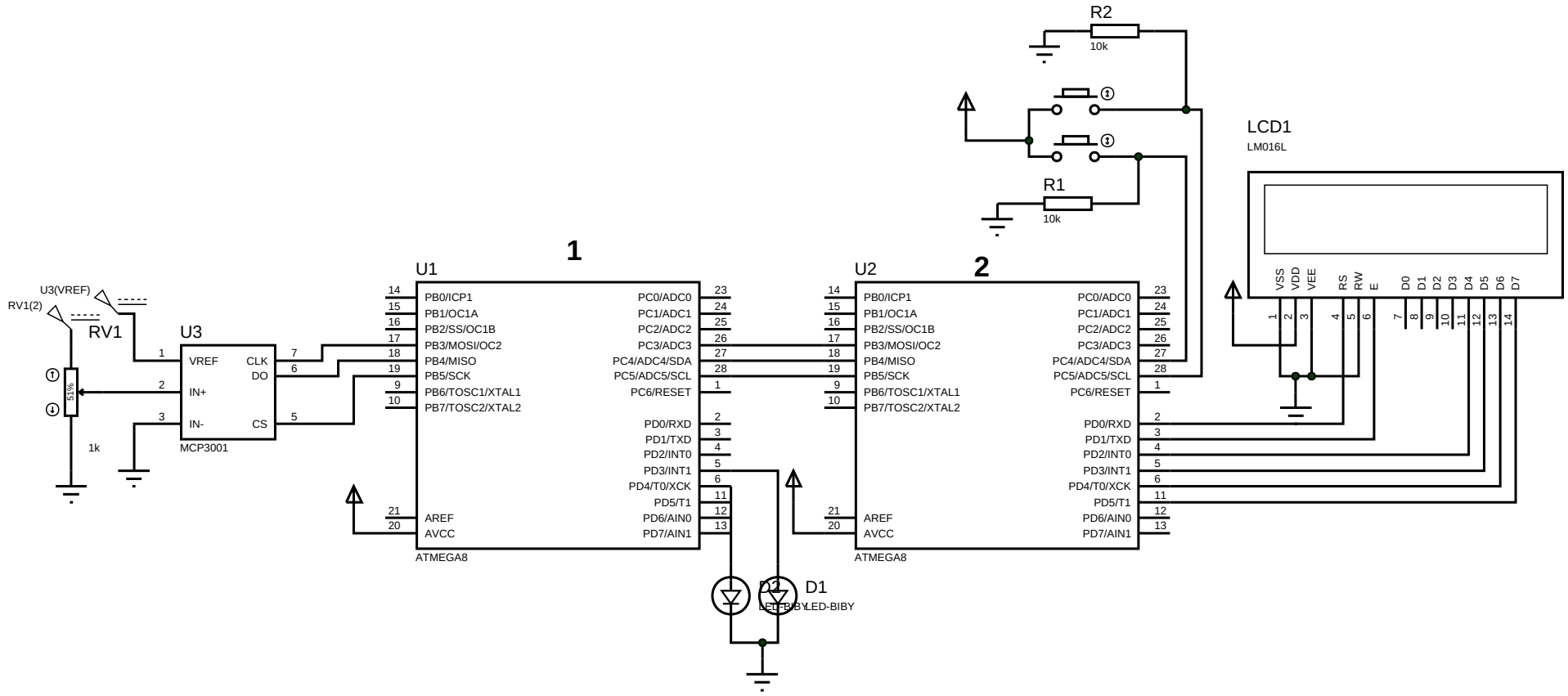
R2
10k
R1
10k
LCD1
LM016L
VSS VDD VEE RS RW E D0 D1 D2 D3 D4 D5 D6 D7
1
U1
ATMEGA8
2
U2
ATMEGA8
PB0/ICP1
PB1/OC1A
PB2/SS/OC1B
PB3/MOSI/OC2
PB4/MISO
PB5/SCK
PB6/TOSC1/XTAL1
PB7/TOSC2/XTAL2
PC0/ADC0
PC1/ADC1
PC2/ADC2
PC3/ADC3
PC4/ADC4/SDA
PC5/ADC5/SCL
PC6/RESET
PD0/RXD
PD1/TXD
PD2/INT0
PD3/INT1
PD4/T0/XCK
PD5/T1
PD6/AIN0
PD7/AIN1
AREF
AVCC
U3(VREF)
RV1(2)
RV1
U3
VREF
IN+
IN-
CLK
DO
CS
MCP3001
1k
D1
LED-BIBY